HLT-5/20-8NS-T

8-Way Power Divider

Specifications

SN	Parameters	Specifications
1	频率范围 Frequency Range	5～20 MHz
2	插入损耗 Insertion Loss	≤ 0.5dB（Excluding theoretical loss 未含理论损耗9.0 dB）
3	驻波比 VSWR	Max.1.3
4	隔离度 Isolation	Min.18dB
5	幅度平衡 Amplitude Balance	±0.1dB
6	相位平衡 Phase Balance	±1°
7	阻抗 Impedance	50 Ohms
8	端口接头 Input/Output Connectors	SMA-Female，N-Female
9	承受功率 Power Rating	Splitter 分路器用时 30W; Combiner 合路器用时30W，即每路输入不大于3.75W
10	工作温度 Operation Temperature	-45℃ ~ +85℃

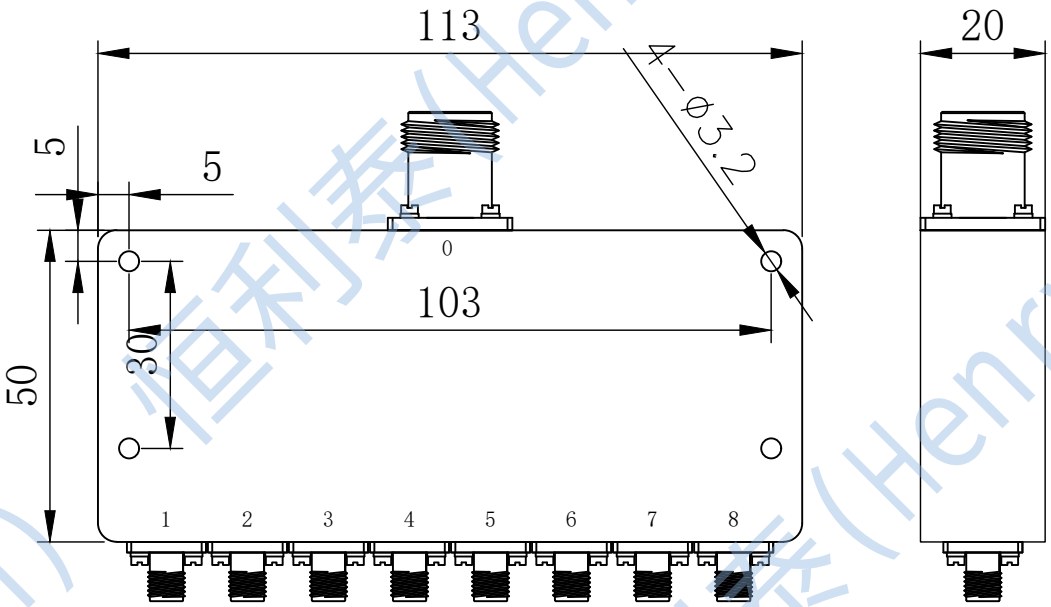

Units: mm
Tolerance:±0.3mm

成都恒利泰科技有限公司
Chengdu HenryTech
Technology Co., Ltd

成都市金牛区华西科创5号楼1401
Room 1401, 14th Floor, Building 5, Huaxi Science and Technology Innovation Center, No. 50, Shuxi Road, Jinniu District, Chengdu City

TEL: +86-13890694956（李工Mr.Li）
E-mail: mr_li@henglitaitech.com