REV	DESCRIPTION OF REVISION	ECN NO.	BY	DATE	APPROVED
A	Initial Release	———	H. wei	19/03/17	19/03/17

This document contains proprietary information and such informationmay not be disclosed to others for any purposes, not used for sales/marketing/procurement purposes without written permission

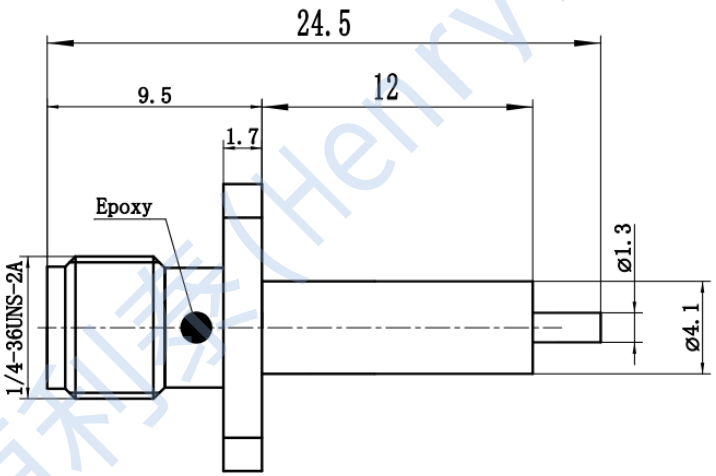

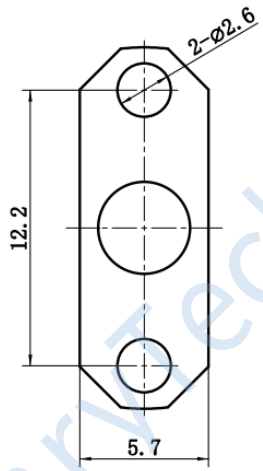

Recommended Mounting Hole

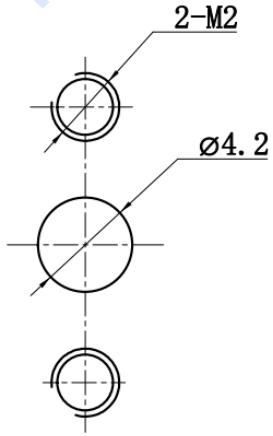

1 Electrical电气性能

1.1 Impedance特性阻抗: 50Ω

1.2 Frequency频率范围: DC～18GHz

1.3 VSWR电压驻波比:≤1.20@6GHz

1.4 Insertion Loss(dB):≤0.05xSqt.(f_GHz)

1.5 Insulation resistance绝缘电阻: ≥5000MΩ

1.6 Dielectric withstanding voltage介质耐压: 1000V

2 Environmental&Mechanical环境&机械性能

2.1 Temperature range温度范围: -55℃～+125℃

2.2 RoHs Compliant 符合RoHs

2.3 Durability寿命: >500 cycles (次)

3 Materials&Finish材料&涂镀

3.1 Body外壳:Brass,Gold Plated 黄铜,镀金

3.2 Insulator 绝缘介质:Teflon 聚四氟乙烯

3.3 Contact Pin中心导体:Beryllium-Copper,Gold Plated 铍青铜,镀金

Notes:

1. ALL SPECIFICATIONS ARE SUBJECT TO CHANGE NOTICE AT ANY TIME

2. CUSTOMER OUTLINE DRAWING FOR REFERENCE ONLY

DRAWN: H. wei 19/03/17

ENGINEER: L. yu 19/03/17

APPROVED: W. yi 19/03/17

TOLERANCES UNLESS OTHERWISE SPEFICIED
X ±0.50
.X ±0.20
.XX ±0.10
ANGLES ±1°

TITLE:

RF Coaxial Connector
RF Connector SMA
Female Flange Mount

成都恒利泰科技有限公司
Chengdu HenryTech Technology co., Ltd

DIMENSION IN MILLIMETERS (mm)

PART NO:	SIZE:	SCALE:	SHEET:	REV:
HL-SMA-KFD1019	A4	N/A	1/1	A