REV	DESCRIPTION OF REVISION	ECN NO.	BY	DATE	APPROVED
A	Initial Release	———	H. wei	12/7/06	12/7/06

This document contains proprietary information and such informationmay not be disclosed to others for any purposes, not used for sales/marketing/procurement purposes without written permission

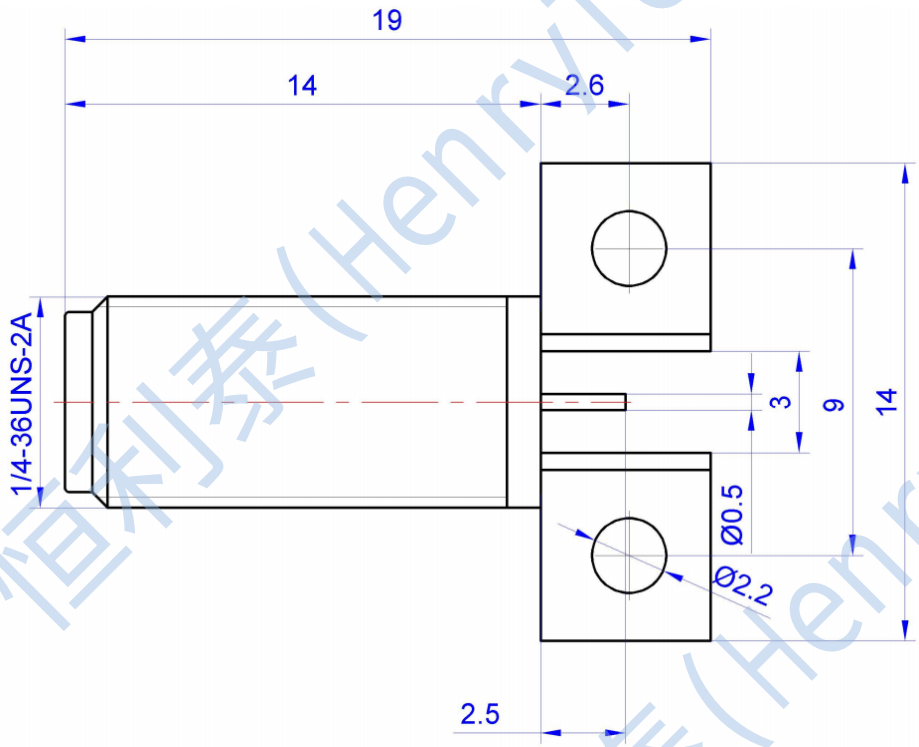

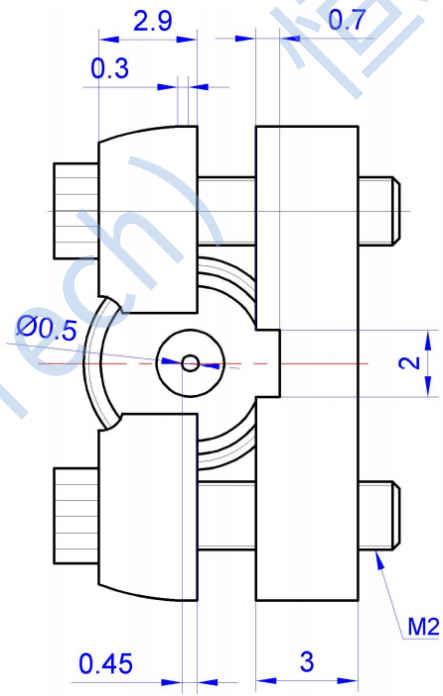

技术特性/Electrical Specifications

特性阻抗/Impedance	50Ω
频率范围/Frepuency Range	DC-18GHz
电压驻波比/VSWR	≤1.30
插入损耗/Insert Loss	≤0.06xsqt.(f GHz)dB
耐　压/Withstanding Voitage	≥750V
绝缘电阻/Insulation Resistance	≥5000MΩ

连接参数/The connection parameters

耐久性/durability	≥500次 (cycles)
内导体保持力/Center conductor retention	≥0.28N

环境参数/Environmental Data

温度范围/Temperature Range	-55℃ to 155℃

材料/Material Data

外导体/Outer contact	黄铜 Brass/金 gold Plated
中心导体/Center contact	铍青铜 Beryllium Bronze/金 gold Plated
绝缘介质/Insulator	聚四氟乙烯/PTFE

Notes:

1. ALL SPECIFICATIONS ARE SUBJECT TO CHANGE NOTICE AT ANY TIME
2. CUSTOMER OUTLINE DRAWING FOR REFERENCE ONLY

DRAWN: H. wei 12/07/06
ENGINEER: L. yu 12/07/06
APPROVED: W. yi 12/07/06

TOLERANCES UNLESS OTHERWISE SPEFICIED
X ±0.50
.X ±0.20
.XX ±0.10
ANGLES ±1°

TITLE:
RF Coaxial Connector
SMA Female Bulkhead
Connector For PCB

PART NO: HL3-SMA-KYHD35

HenryTech

DIMENSION IN MILLIMETERS (mm)

SIZE:	SCALE:	SHEET:	REV:
A4	N/A	1/1	A