成都恒利泰科技有限公司
Chengdu HenryTech Technology co., Ltd

产品规格书 Product Datasheet

项目 Item	内容 Description
产品名称 Product Name	LTCC 天线 LTCC Antenna（RF Antenna）
产品型号 Product Model	HM-ANT1030-1905-50M
文档版本 Document Rev	V1.0

一、产品特性 Features

- 多层单片结构，可靠性高 Multilayer monolithic construction yields high reliability
- 低插损、小尺寸贴片设计 Low insertion loss and small size SMD chip design
- 简化复杂的调试与电路设计 Simplify complex tuning and circuit design
- LTCC 工艺 LTCC process

二、电气性能 Electrical Specifications（T = 25℃）

No.	项目 Item	指标 Spec	单位 Unit
1	中心频率 Centre Frequency	1880~1930	MHz
2	峰值增益 Peak Gain	2.6 (Typ.)	dBi
3	阻抗 Impedance	50	Ω
4	驻波比 VSWR	2.5 max.	
5	极化方式 Polarization	Linear（线极化）	
6	方位面波束宽度 Azimuth Beamwidth	Omni-directional（全向）	

三、工作与存储条件 Operating & Storage Conditions

项目 Item	指标 Specification
工作温度 Operating Temperature（元器件 Component）	-40℃ ~ +85℃
存储温度 Storage Temperature（元器件 Component）	-40℃ ~ +85℃
焊接前存储温度 Storage before Soldering（含包装材料 Incl. packaging）	+5℃ ~ +40℃
焊接前存储湿度 Humidity	30% ~ 70% RH

Tel: +86-28-85589664
E-mail: mr_li@henglitaitech.com
Web: www.hltchips.com
Room 1401, 14th Floor, Building 5, Huaxi Science and Technology Innovation Center, No. 50, Shuxi Road, Jinniu District, Chengdu City

四、外形尺寸 Outline Drawing

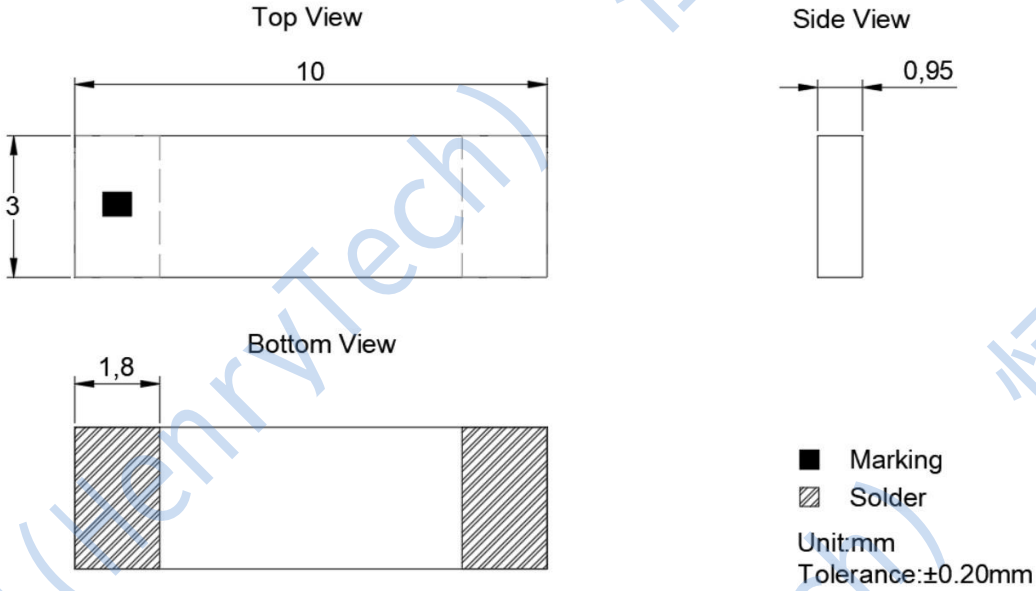

五、引脚定义 Pin Connections

Pin No.	功能 Function
1	输入端 Input Port
2	输出端 Output Port

六、焊盘尺寸 PCB Land Pattern

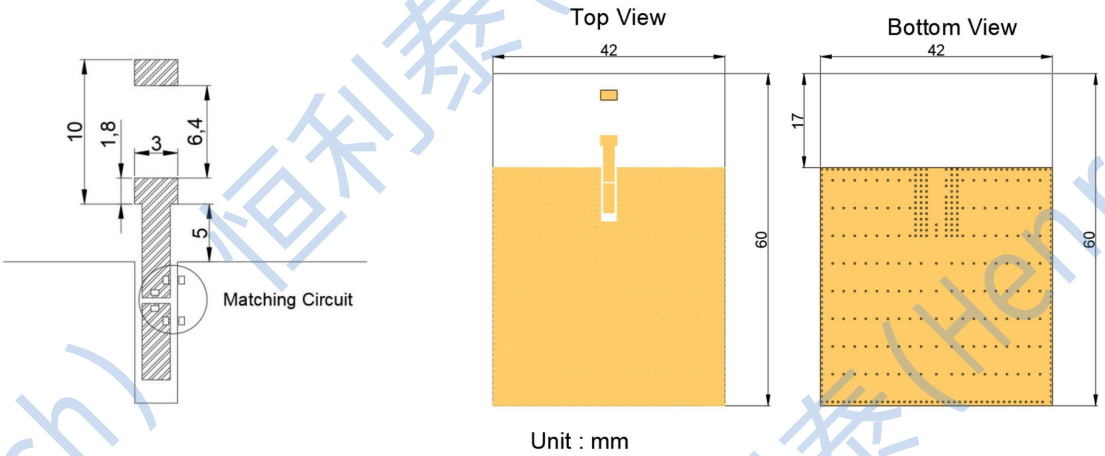

注意 Notes:

1. 线宽应设计为匹配 50Ω 特性阻抗，具体取决于 PCB 材料和厚度。Line width to be designed to match 50Ω characteristic impedance, depending on PCB material and thickness.

Tel: +86-28-85589664
E-mail: mr_li@henglitaitech.com
Web: www.hltchips.com
Room 1401, 14th Floor, Building 5, Huaxi Science and Technology Innovation Center, No. 50, Shuxi Road, Jinniu District, Chengdu City

七、测试曲线 Typical Performance Characteristics（T = 25℃）

回损与史密斯图 Return Loss & Smith Chart

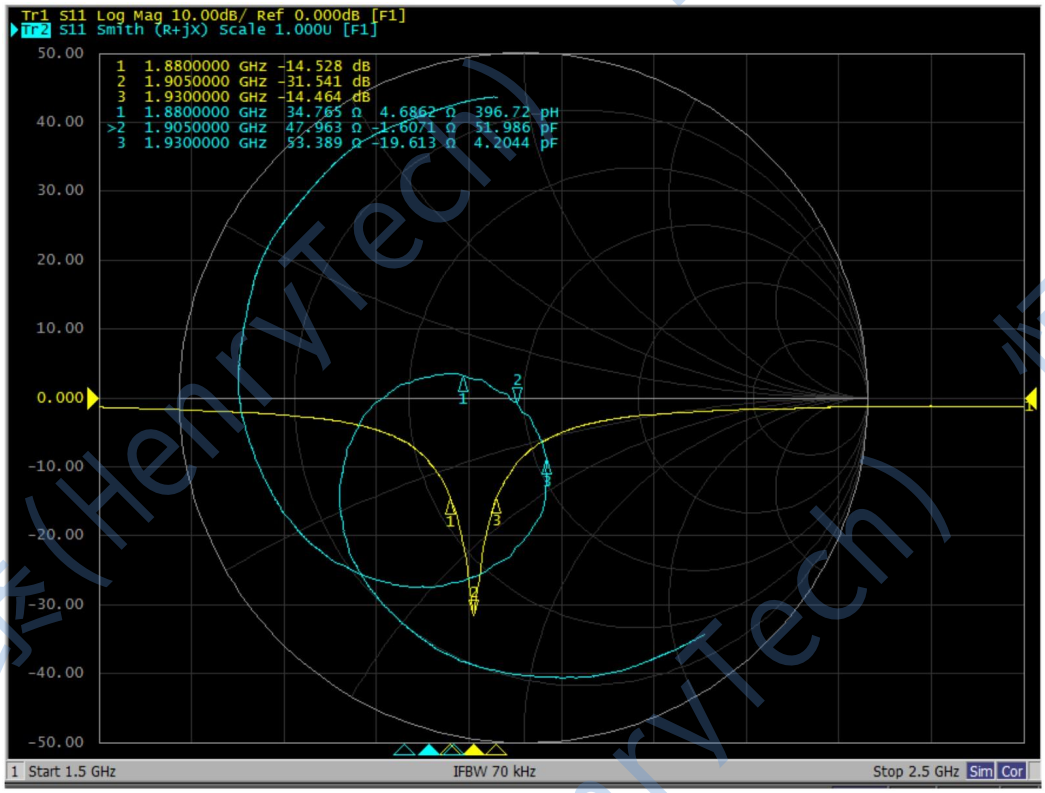

增益与效率 Gain & Efficiency

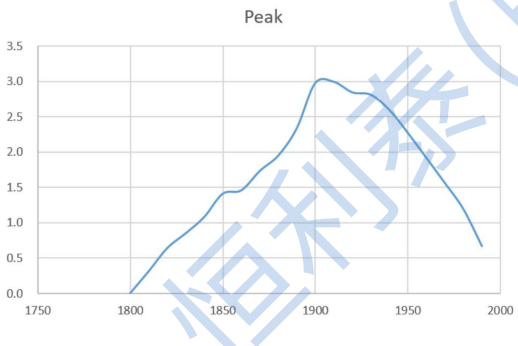

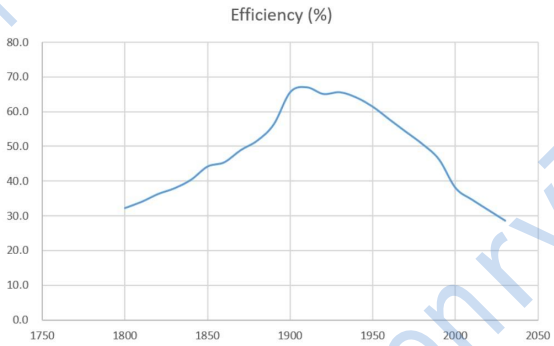

1880MHz 辐射方向图 3D Radiation Pattern

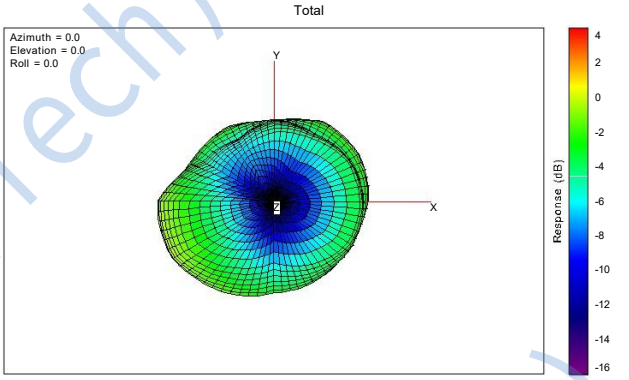

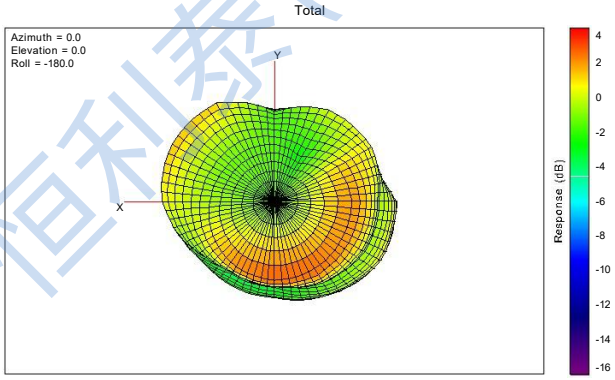

Tel: +86-28-85589664
E-mail: mr_li@henglitaitech.com
Web: www.hltchips.com
Room 1401, 14th Floor, Building 5, Huaxi Science and Technology Innovation Center, No. 50, Shuxi Road, Jinniu District, Chengdu City

1900MHz 辐射方向图 3D Radiation Pattern

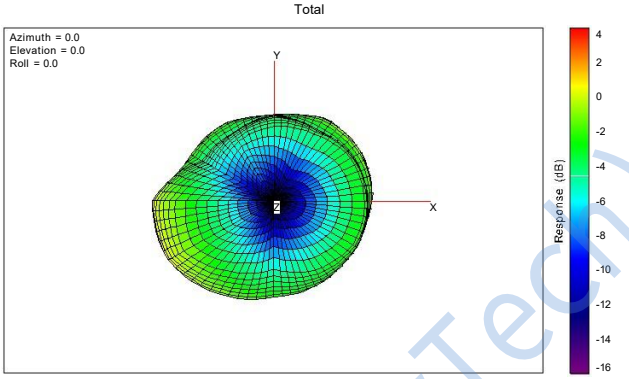

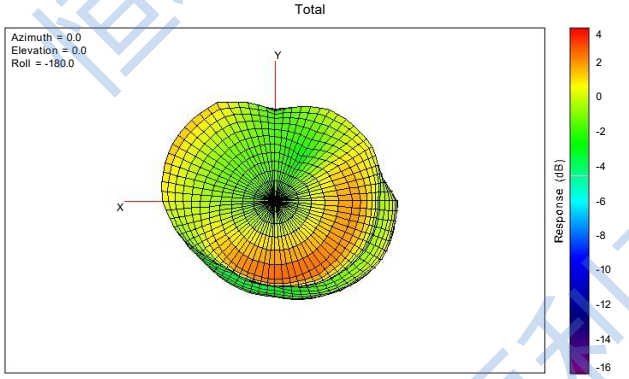

1910MHz 辐射方向图 3D Radiation Pattern

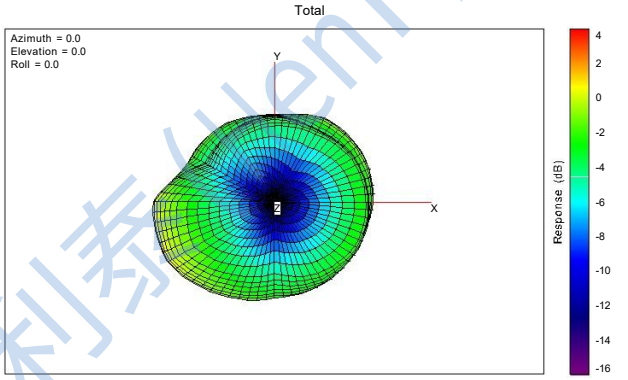

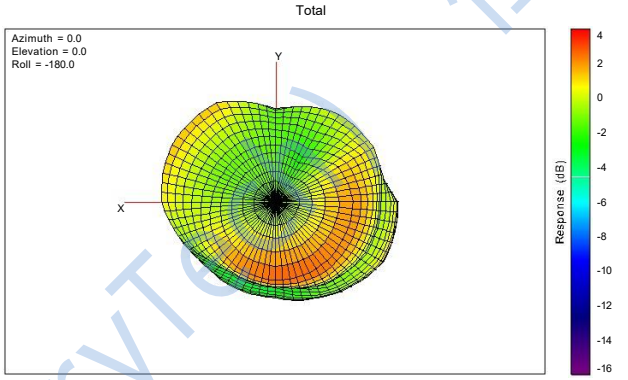

1920MHz 辐射方向图 3D Radiation Pattern

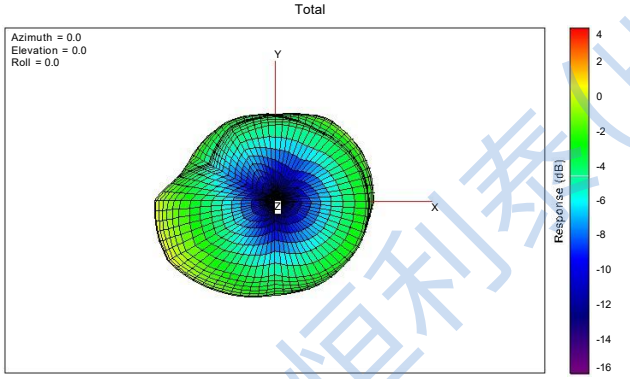

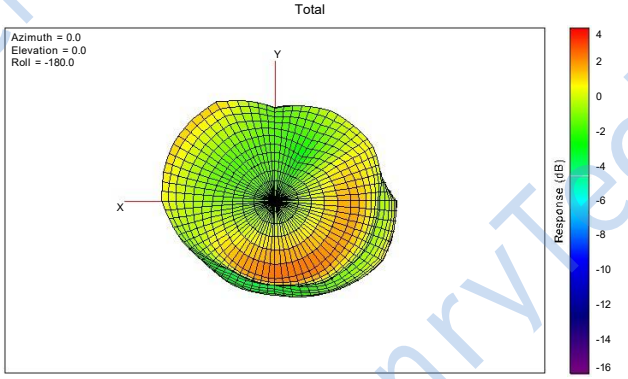

1930MHz 辐射方向图 3D Radiation Pattern

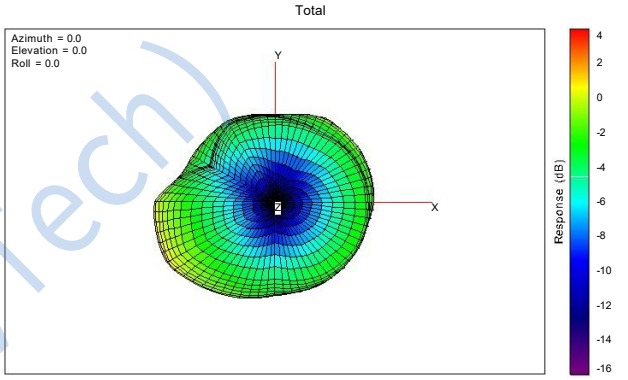

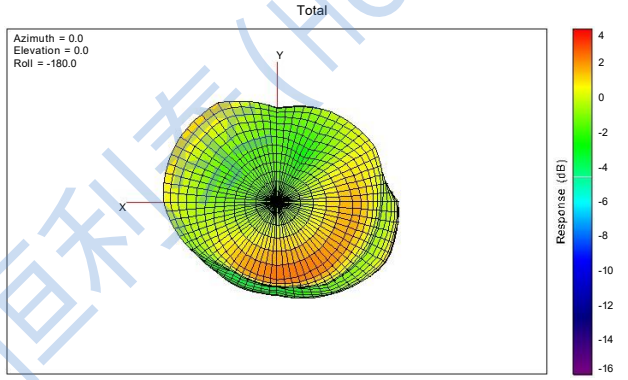

Tel: +86-28-85589664
E-mail: mr_li@henglitaitech.com
Web: www.hltchips.com
Room 1401, 14th Floor, Building 5, Huaxi Science and Technology Innovation Center, No. 50, Shuxi Road, Jinniu District, Chengdu City

2D 辐射方向图 2D Radiation Pattern

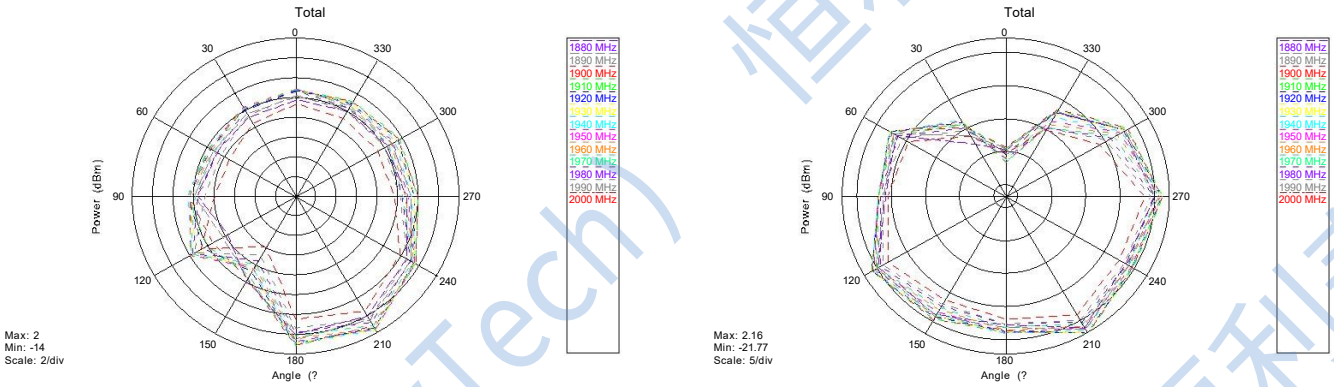

八、回流焊温度曲线 Reflow Soldering Profile

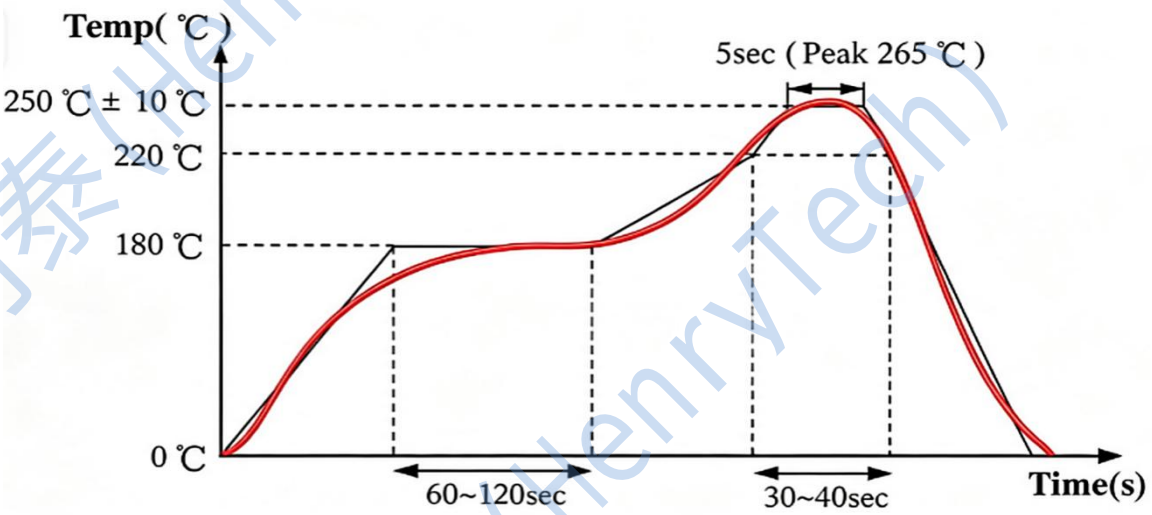

Tel: +86-28-85589664
E-mail: mr_li@henglitaitech.com
Web: www.hltchips.com
Room 1401, 14th Floor, Building 5, Huaxi Science and Technology Innovation Center, No. 50, Shuxi Road, Jinniu District, Chengdu City